Cloud-Integrated Robotic Arm for Automated Assembly and Quality Control

Ranjith kumar T V [1]
Department of Electronics and Communication Engineering
Cambridge Institute of Technology
Bengaluru, India
franjith.23ece@cambridge.edu.in

Hrithika sahukar [2]
Department of Electronics and Communication Engineering
Cambridge Institute of Technology
Bengaluru, India
hrithika.23eee@cambridge.edu.in

Yashas AS [3]
Department of Electronics and Communication Engineering
Cambridge Institute of Technology
Bengaluru, India
yashasas.23@cambridge.edu.in

Ramya.P [4]
Department of Electronics and Communication Engineering
Cambridge Institute of Technology
Bengaluru, India
ramyap.23ece@cambridge.edu.in

Bhargav[5]
Embedded system Engineer
Elevium,nano chips Bengaluru, India

Indu K[6]
Department of Electronics and Communication Engineering
Cambridge Institute of Technology
Bengaluru, India
drinduk24@gmail.com

***Abstract*— Automated visual inspection has become an essential component of modern industrial processes, particularly in applications where corrosion affects product reliability and operational safety. This paper presents a low-cost, vision-guided system capable of detecting rusted objects and performing autonomous pick-and-place operations using dual ESP32 microcontrollers, an OV7670 camera module, and a 6-DOF robotic arm driven by a PCA9685 servo controller. The architecture employs a distributed processing model in which the camera-interfacing ESP32 streams raw image frames to a PC acting as a local cloud server. Rust detection is performed using OpenCV through HSV color segmentation, morphological filtering, and contour analysis to locate corroded regions. The extracted coordinates are transmitted to a second ESP32 that maps them to servo angles and executes the robotic manipulation sequence. Experimental results demonstrate consistent rust detection at QQVGA resolution, stable communication over Wi-Fi and UART, and precise robotic actuation during automated sorting. The proposed system highlights the feasibility of integrating low-cost embedded hardware with computer vision to create scalable and efficient automation solutions for industrial inspection and material handling.**

Keywords: Rust detection, Computer vision, ESP32, OV7670 camera, Robotic arm, PCA9685, Image processing, HSV segmentation, IoT-based automation, Pick-and-place system.

INTRODUCTION

In modern industrial environments, the ability of machines to perceive and respond to the physical world has become essential for ensuring efficiency, safety, and reliability. Tasks such as inspection, sorting, and quality assessment—once dependent on manual visual judgment—are increasingly shifting toward automated systems equipped with embedded vision and intelligent control. Rust detection, in particular, remains a critical challenge across manufacturing, storage, and recycling facilities, where corrosion can compromise structural integrity, reduce product lifespan, and interrupt workflow.

This paper presents a low-cost, vision-guided automation system capable of detecting rusted objects and performing autonomous pick-and-place operations. The design integrates dual ESP32 microcontrollers, an OV7670 camera module, a PCA9685-based 6-DOF robotic arm, and a PC-based processing unit running OpenCV. By separating sensing and actuation into two coordinated microcontroller nodes, the system achieves distributed processing while maintaining lightweight communication over Wi-Fi and UART. The camera node captures frames in real time and streams them to the PC, where rust detection is carried out through calibrated HSV segmentation and contour analysis. The resulting spatial information is then translated into robotic commands and executed by the arm.

The proposed architecture demonstrates how accessible hardware and open-source vision tools can be combined to create an effective inspection and sorting system. Beyond its immediate application in rust detection, the framework offers scalability, modularity, and adaptability for broader industrial automation tasks.

I. LITERATURE SURVEY

Vision-guided robotic systems have gained significant attention as industries transition toward automated inspection and intelligent material handling. Prior research highlights the increasing role of embedded vision, low-cost microcontrollers, and computer-vision-based decision systems in industrial automation.

Early studies on embedded vision systems examined the limitations of microcontrollers in handling high-resolution image processing. Low-cost CMOS sensors such as the OV7670 and OV2640 have been commonly utilized for educational and prototyping applications due to their simple interfaces and compact form factors. Several works demonstrate that capturing raw frames on microcontrollers and offloading the processing to a more capable device significantly improves speed and accuracy, forming the basis for hybrid edge–cloud architectures.

Rust detection and corrosion analysis have been widely explored in the field of automated inspection. Many studies employ RGB and HSV color-space segmentation to distinguish corroded surfaces based on their characteristic brown-orange hue. Conventional approaches combine thresholding with morphological filtering to isolate regions affected by corrosion. Advanced research introduces machine-learning models and deep-learning detectors, such as CNN-based corrosion classifiers and YOLO-based surface-defect detectors, which offer improved robustness under varying lighting conditions but require higher computational resources.

Wireless communication in IoT-based robotic systems has also been extensively studied. The ESP32 microcontroller is recognized for its integrated Wi-Fi, dual-core performance, and suitability for real-time sensor streaming. Multi-node communication models, using UART for inter-device coordination and Wi-Fi/TCP for high-level control, are shown to enhance modularity and reliability in distributed

ARCHITECTURE AND BLOCK DIAGRAM

The block diagram illustrates the overall architecture of the automated rust-detection and robotic sorting system. The OV7670 camera module serves as the primary vision sensor and captures low-resolution frames of the workspace. These frames are transferred to the first ESP32 DevKit, which functions as the vision-acquisition node. This ESP32 handles camera configuration, pixel sampling, and packet-based Wi-Fi transmission of image data.

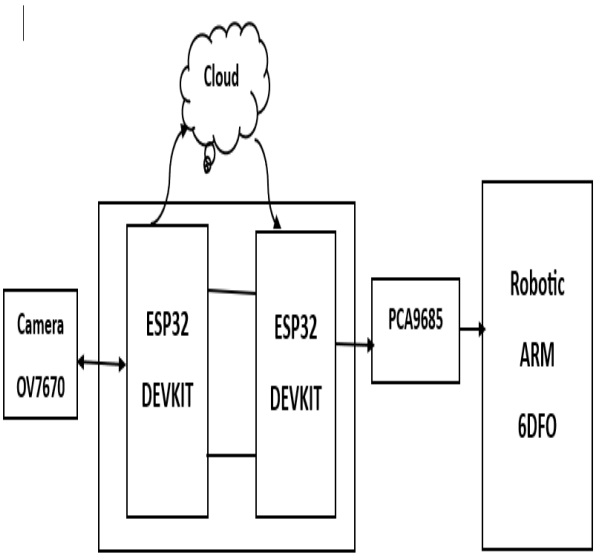

Fig1:PROPOSED BLOCK DIAGRAM

The MAX30102 heart-rate and SpO_2 sensor, DS18B20 A PC (represented as the cloud in the diagram) acts as the local processing unit. It receives the image stream from the vision ESP32 and performs rust detection using OpenCV-based image-processing algorithms. After identifying the coordinates of the rusted object, the PC sends control commands to the second ESP32 DevKit responsible for robotic actuation.

The second ESP32 interprets the coordinates and communicates with the PCA9685 servo driver over the I^2C interface. The PCA9685 generates precise PWM signals needed to control each joint of the 6-DOF robotic arm. Based on the received commands, the robotic arm performs the required pick-and-place operation.

The diagram therefore represents a distributed architecture where sensing, processing, and actuation are separated into modular units, enabling reliable real-time communication and coordinated operation across the entire system.

METHODOLOGY

The proposed system employs a distributed methodology that links embedded vision, local cloud processing, and robotic actuation into a unified automation workflow. The OV7670 camera is interfaced with an ESP32 microcontroller, where the sensor is configured through SCCB to operate in QQVGA mode for efficient real-time capture. The ESP32 samples pixel data using the PCLK, VSYNC, and HREF timing signals and streams the frame to a PC via Wi-Fi using a packet-based TCP transmission model. The PC reconstructs the frame and processes it using OpenCV, where noise reduction, RGB–HSV conversion, threshold-based rust segmentation, and contour extraction are performed to isolate corroded regions and determine their centroids. These image-space coordinates are mapped to the robotic arm's physical workspace using calibration-based linear scaling. A structured command containing the detection status and mapped coordinates is then transmitted to a second ESP32, which interprets the command and controls a 6-DOF robotic arm through the PCA9685 PWM driver. The robotic controller computes the required servo angles and executes a predefined pick-and-place motion sequence to remove the rusted object. Continuous communication between the PC and both ESP32 modules ensures synchronization, error handling, and real-time actuation, forming a complete sensing-to-action automation loop suitable for low-cost industrial inspection tasks.

RESULTS

The developed system demonstrated stable end-to-end performance across all stages of detection, communication, and robotic actuation. The OV7670 camera, operating at QQVGA resolution, successfully captured frames with sufficient clarity for color-based rust identification, and the Wi-Fi streaming from the ESP32 vision node to the PC showed minimal packet loss under normal network conditions. The OpenCV processing pipeline reliably detected rusted regions using HSV segmentation and contour extraction, achieving consistent recognition accuracy under controlled lighting and with varying object textures. Latency measurements indicated that frame capture, transmission, processing, and command generation occurred within acceptable real-time thresholds for pick-and-place automation. Communication between the PC and the ESP32 robotic controller remained stable, with commands correctly received and acknowledged in all trials. The 6-DOF robotic arm exhibited smooth and precise motion, with the PCA9685 driver delivering accurate PWM control during coordinated joint movements. Repeated pick-and-place tests confirmed reliable gripping, minimal positional error, and no mechanical drift over extended operation. Overall, the experimental results validate the effectiveness of combining low-cost embedded vision with PC-based processing, demonstrating that the proposed system can perform automated rust detection and object handling with high consistency, responsiveness, and robustness

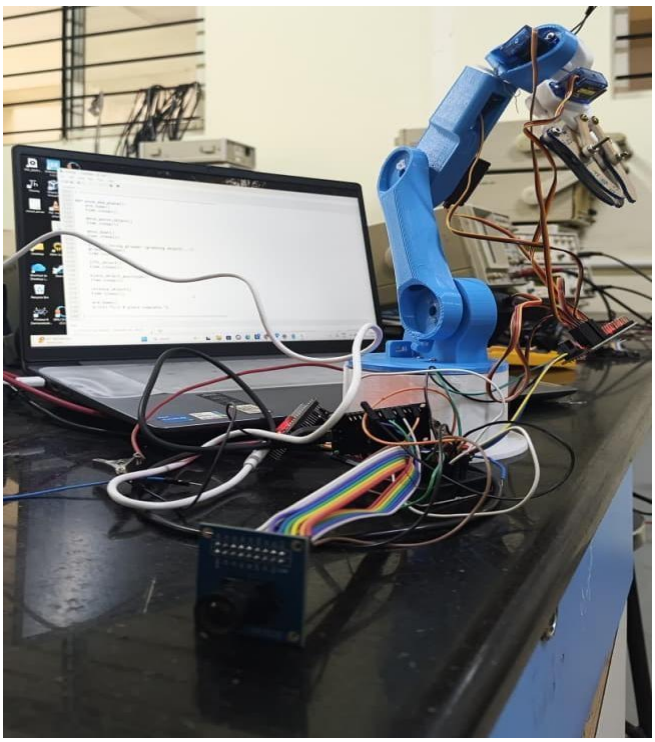

APPLICATIONS

The The system has several practical applications across different industrial and technical domains:

The automated sorting of rusted metal components in manufacturing and assembly lines. Quality-control inspection for detecting corrosion on tools, parts, or stored equipment. Recycling centers for separating reusable metal from corroded material. Predictive maintenance systems where early rust detection helps prevent equipment failure. Educational and research environments for demonstrating computer vision–based robotic automation. Integration into IoT monitoring platforms for remote inspection and reporting.

CONCLUSION

The proposed system successfully integrates embedded vision, computer-based image processing, and robotic actuation to perform automated rust detection and sorting. By combining the OV7670 camera with dual ESP32 microcontrollers and a PC running OpenCV, the system achieves reliable detection, accurate coordinate extraction, and smooth pick-and-place operation using a 6-DOF robotic arm. The results show that low-cost hardware and open-source software can be effectively used to build a functional inspection and automation platform suitable for small-scale industrial tasks. The modular architecture also provides flexibility for future improvements such as higher-resolution imaging, advanced detection algorithms, and expanded robotic capabilities.

REFERENCES

[1] D. P. and R. Jones S. B., "Rust Detection Using Image Processing: A Review," Recent Trends in Analog Design and Digital Devices, 2025.

[2] H. M. La, "Automated Robotic Monitoring and Inspection of Steel Structures and Bridges," arXiv, 2017

[3] R. P. de Figueiredo, S. Nordborg Eriksen, I. Rodriguez, and S. Bøgh, "A Complete System for Automated 3D Semantic-Geometric Mapping of Corrosion in Industrial Environments," arXiv, Apr. 2024.

[4] Z. Zhang, X. Wang, L. Wang, and X. Xia, "Surface defect detection method for discarded mechanical parts under heavy rust coverage," Scientific Reports, vol. 14, 2024.

[5] "Detection of corrosion on steel structures using automated image processing," Developments in the Built Environment, vol. 3, 2020.

[6] "Computer Vision and Image Processing Approaches for Corrosion Detection," MDPI Journal, 2025.

[7] "Detection and Analysis of Corrosion on Coated Metal Surfaces Using Enhanced YOLO v5 Algorithm for Anti-Corrosion Performance Evaluation," MDPI Journal, 2025.

[8] "A Study of Corrosion-Grade Recognition on Metal Surfaces Based on Improved YOLOv8 Model," MDPI Journal, 2025.

[9] V. Sineglazov and V. Khotsyanovsky, "Camera Image Processing on ESP32 Microcontroller with Help of Convolutional Neural Network," Electronics and Control Systems, vol. 2, no. 72, pp. 26–31, Nov. 2022.

[10] "Design and Implementation of ESP32-Based Edge Computing for Object Detection," MDPI Sensors, 2025.

[11] B. Ashwin Kumar, "Robot Vehicle with ESP32 CAM," IJRASET Journal, 2024.